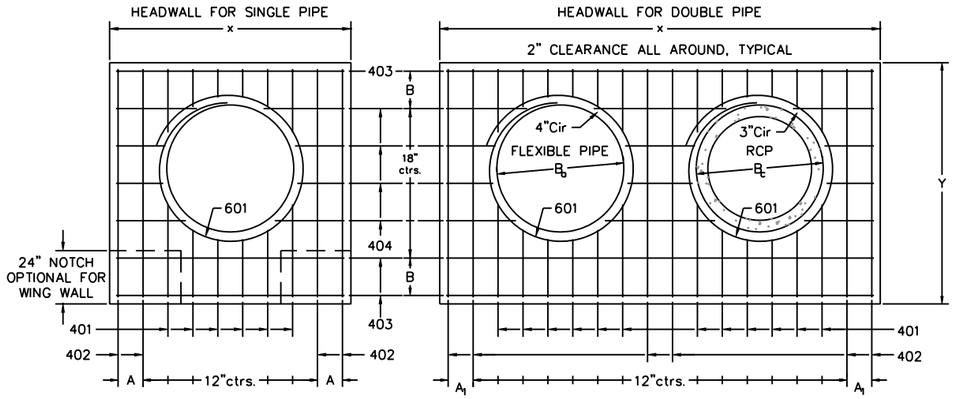

TYPICAL BAR LAYOUT FOR CONCRETE HEADWALLS

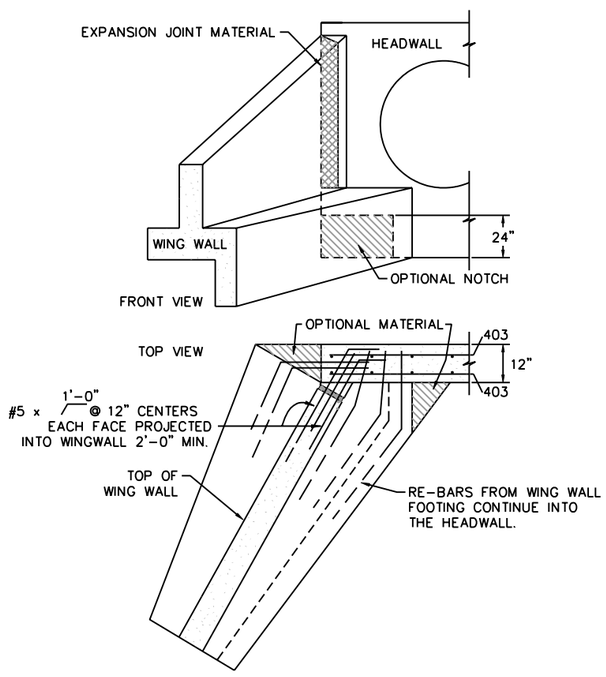

WING WALL CONNECTION

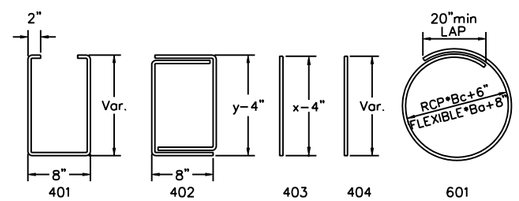

BAR BENDING

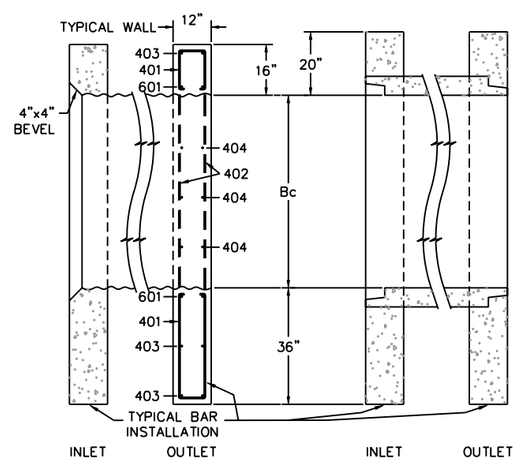

ENDS OF FLEXIBLE PIPE

ENDS OF RCP

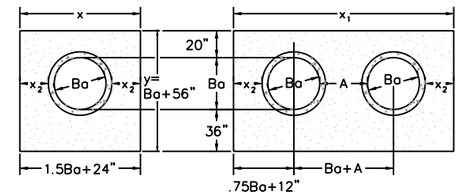

HEADWALL FOR RCP ~ ROUND												
DIMENSIONS									QUANTITIES			
									CONCRETE		STEEL	
Ba in.	Bc in.	x ft-in	A in.	x_1 ft-in	A_1 in.	y ft-in	B in.	x_2 in.	SGL cu. yd.	DBL. cu. yd.	SGL lb.	DBL. lb.
54	65	8-9	8-5	15-6	7	9-2	17	20	2.12	3.55	204	364
60	72	9-6	7	17-0	10	9-8	11	21	2.35	3.99	236	414
66	79	10-3	11.5	18-6	7	10-2	14	22	2.60	4.44	249	453
72	86	11-0	10	20-0	10	10-8	17	23	2.85	4.91	270	476
78	93	11-9	8.5	21-3	11	11-2	11	24	3.11	5.29	306	527
84	100	12-6	7	22-6	7	11-8	14	25	3.38	5.68	333	572
90	107	13-3	11.5	23-9	8.5	12-2	17	26	3.66	6.08	335	593
96	114	14-0	10	25-0	10	12-8	11	27	3.94	6.48	379	649
102	121	14-9	8.5	26-3	11.5	13-2	14	28	4.24	6.89	400	664
108	128	15-6	7	27-6	7	13-8	17	29	4.54	7.30	424	707

FOR PIPES LESS THAN 54" IN DIAMETER THE QUANTITIES MUST BE COMPUTED.

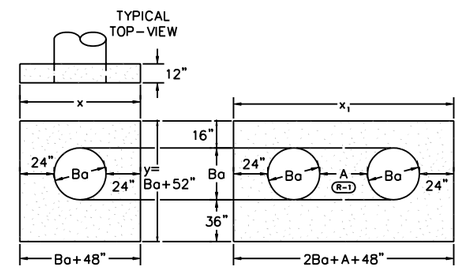

HEADWALL FOR FLEXIBLE PIPE ~ ROUND									
DIMENSIONS							QUANTITIES			
							CONCRETE		STEEL	
Ba in.	x ft-in	A in.	x_1 ft-in.	A_1 in.	y ft-in	B in.	SGL cu. yd.	DBL. cu. yd.	SGL lb.	DBL. lb.
54	8-6	7	15-3	11.5	8-10	15	2.19	3.81	211	358
60	9-0	10	16-6	7	9-4	18	2.38	4.25	217	396
66	9-6	7	17-9	8.5	9-10	12	2.58	4.70	252	454
72	10-0	10	19-0	10	10-4	15	2.78	5.17	255	472
78	10-6	7	20-0	10	10-10	18	2.98	5.56	276	499
84	11-0	10	21-0	10	11-4	12	3.19	5.95	297	553
90	11-6	7	22-0	10	11-10	15	3.40	6.36	317	571
96	12-0	10	23-0	10	12-4	18	3.62	6.79	321	597
102	12-6	7	24-0	10	12-10	12	3.84	7.21	364	663
108	13-0	10	25-0	10	13-4	15	4.06	7.63	362	678

FOR PIPES LESS THAN 54" IN DIAMETER THE QUANTITIES MUST BE COMPUTED.

SKEW FACTOR TABLE	
SKEW ANGLE A°	FACTOR (cosec A°)
90	1.000
85	1.004
80	1.015
75	1.035
70	1.064
65	1.103
60	1.155
55	1.221
50	1.305
45	1.414
40	1.556
35	1.743
30	2.000

MULTIPLY x (OR x_1) DIMENSION AND ALL QUANTITIES BY FACTOR IF CULVERT SKEW IS LESS THAN 90°AND HEADWALL REMAINS PARALLEL TO THE ROADWAY.

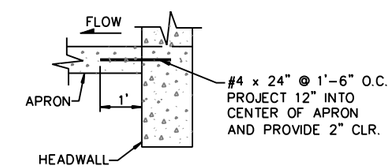

WHEN APRON IS REQUIRED

NOTES:

1. ALL WORK SHALL BE DONE IN ACCORDANCE WITH THE STANDARD SPECIFICATIONS APPLICABLE TO THE PROJECT.
2. CONCRETE SHALL BE CLASS B.
3. HEADWALL SHALL BE PERPENDICULAR TO THE CULVERT ℄ UNLESS OTHERWISE SHOWN ON THE PLANS.
4. FOR WINGWALL DETAILS SEE CDOT STANDARD M-601-20.
5. VOLUME OCCUPIED BY THE PIPE HAS BEEN DEDUCTED FROM THE STEEL AND CONCRETE QUANTITIES.
6. WHEN 2 OR MORE CONDUITS ARE LAID SIDE BY SIDE THEY SHALL BE PLACED SO THAT THE ADJACENT PIPES WILL BE 1/2 INSIDE DIAMETER OR 1/2 INSIDE SPAN OF 3 FEET APART (INCLUDING WALL THICKNESS) WHICHEVER IS LESS.
7. EXPOSED CONCRETE CORNERS SHALL BE CHAMFERED 3/4".
8. ALL BARS HAVE A 2" MINIMUM CLEARANCE.
9. REINFORCING BARS LABELED 40x REFER TO NO. 4 BARS. REINFORCING BARS LABELED 60x REFER TO NO. 6 BARS.
10. INFORMATION FROM CDOT STANDARD PLAN M-601-10 IS REFERENCED IN THIS DETAIL.

HEADWALLS FOR PIPE CULVERTS

CITY OF LOVELAND
PUBLIC WORKS DEPT.
STORMWATER

STORMWATER CONSTRUCTION DRAWINGS

APPROVED: KWG
DATE: 8/17/07
DRAWN BY: TBK

DRAWING SW-8